DGT LED Track Light MD5313 25W Single Colour

DGT | LED LIGHTING SERIES

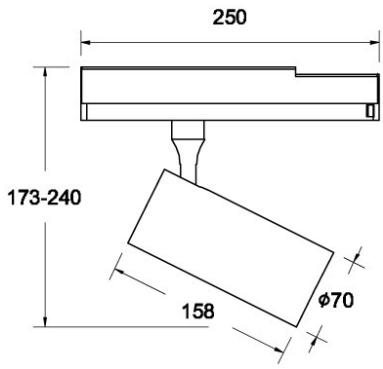

MODEL	CS-DGT-MD5313-WH-3000K	**OPERATING TEMPERATURE (°C)**	-20°C to +40°C
WATTAGE (W)	25W	**DIMMABLE (Y/N)**	YES
POWER FACTOR (PF)	PF>0.8	**BEAM ANGLE (°)**	24°
INPUT VOLTAGE (V)	AC 220-240V	**TILT ANGLE (°)**	90° Vertical, 350° Rotation
COLOUR TEMPERATURE (K)	3000K	**DIMENSION (mm)**	See dimension drawing
LUMEN OUTPUT (LM)	1800 LM	**NET WEIGHT (Kg)**	0.66Kg (without track)
EFFICACY (LM/W)	72 LM/W	**FINISH & Material**	Black or White, Aluminum
CRI (Ra)	90	**INSTALLATION TYPE**	Universal 3-phasing track
COMPLIANCE	SAA	**LIFESPAN (hr.)**	25,000 hr.
IP RATING	IP20	**WARRANTY (yr.)**	3 yr.